Clarke®

EX20

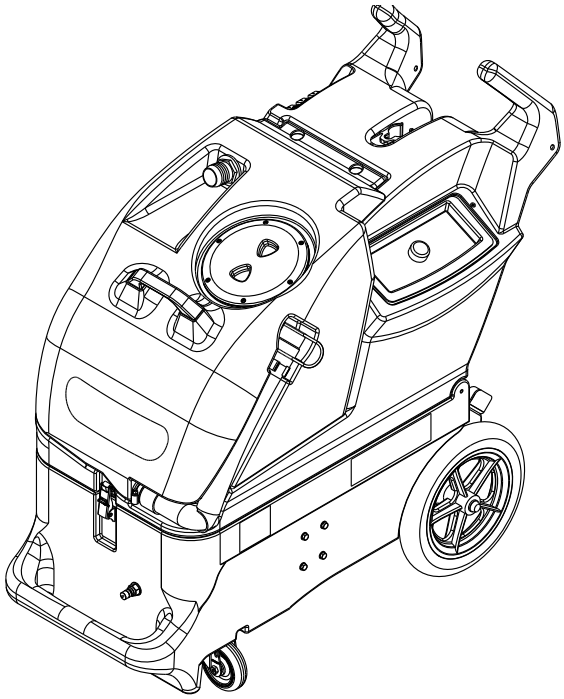

Parts List

Models: 56105288 (100C) (cold), 56105289 (100H) (heated), 56105290 (100SC) (single cord, heated)

Form No. 56042651 5/2015 REV A

Clarke®

GENERAL VIEW

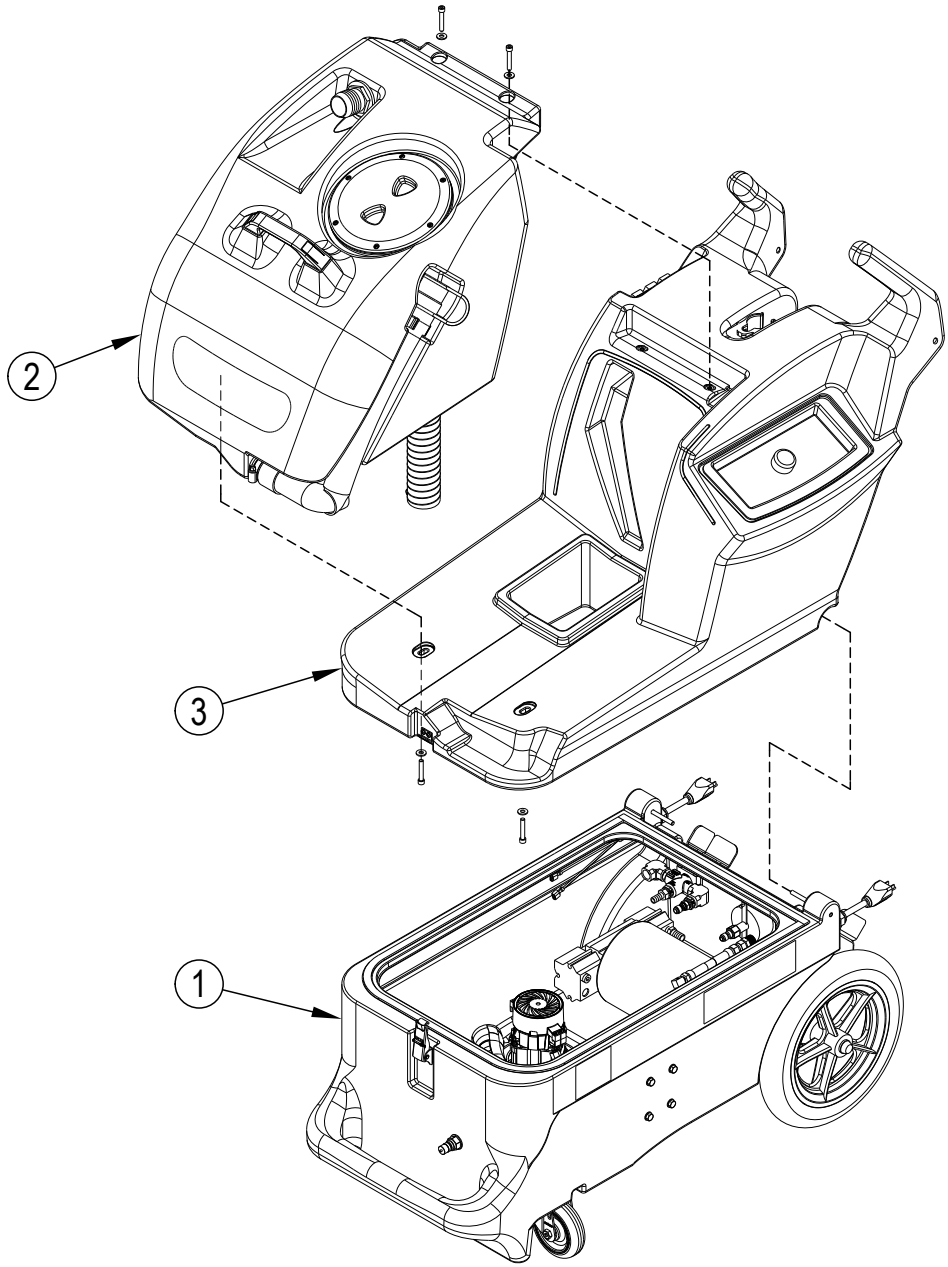

Item	Ref. No.	Qty	Description
1		1	Base System
2		1	Recovery System
3		1	Solution System

TABLE OF CONTENTS

DESCRIPTION	PAGE
General View	2
Decal System	4 - 5
Base System Heated	6 - 7
Base System Cold	8 - 9
Recovery System	10 - 11
Solution System	12 - 13
Ladder Diagram - Single Cord Heated	14
Ladder Diagram - Dual Cord Heated	15
Ladder Diagram - Single Cord Cold	16
Options & Accessories	17
Water Flow Diagram Heated	18
Water Flow Diagram Cold	19

WHEN ORDERING PARTS

* Use the part numbers from the “Ref. No.” columns in this parts list. If the “Ref. No.” column is blank; look under the “Kit” column to identify which kit contains the part in question, then use the kit callout, for example “K1”, to find the “Ref. No.” for that kit.

Kit	Item	Ref. No.	Qty	Description
K1	1		16	Washer Flat 3/16 Zinc Plat
K1	2		2	Screw-BHS-Brass-10-32x3/8-MS
K1	3		3	Washer EPDM 7/32 X 1/8
	4	805	1	Chain-Cover
	5	905	2	Caster Swivel 4 Gray Non MA
K1	6		2	Nut, Hex Nyl Loc 10-24
K1	7		3	Scr- Hex SS 1/4-20 X .75
K1	8		16	Scr, Hex Hd Loc 1/4-20 x .50
K1	9		3	Wsh, Flt SS .260 X 1.000 X .074
	10	56113012	1	Solution Tank
	11	56113034	2	Hinge Plate
	K1	56113103	1	Kit-Hardware Solution Tank

* Specify the model and serial number of the machine.

* Use the space below to record the model and serial number for future reference.

Model _____ Serial No. _____

DECAL SYSTEM

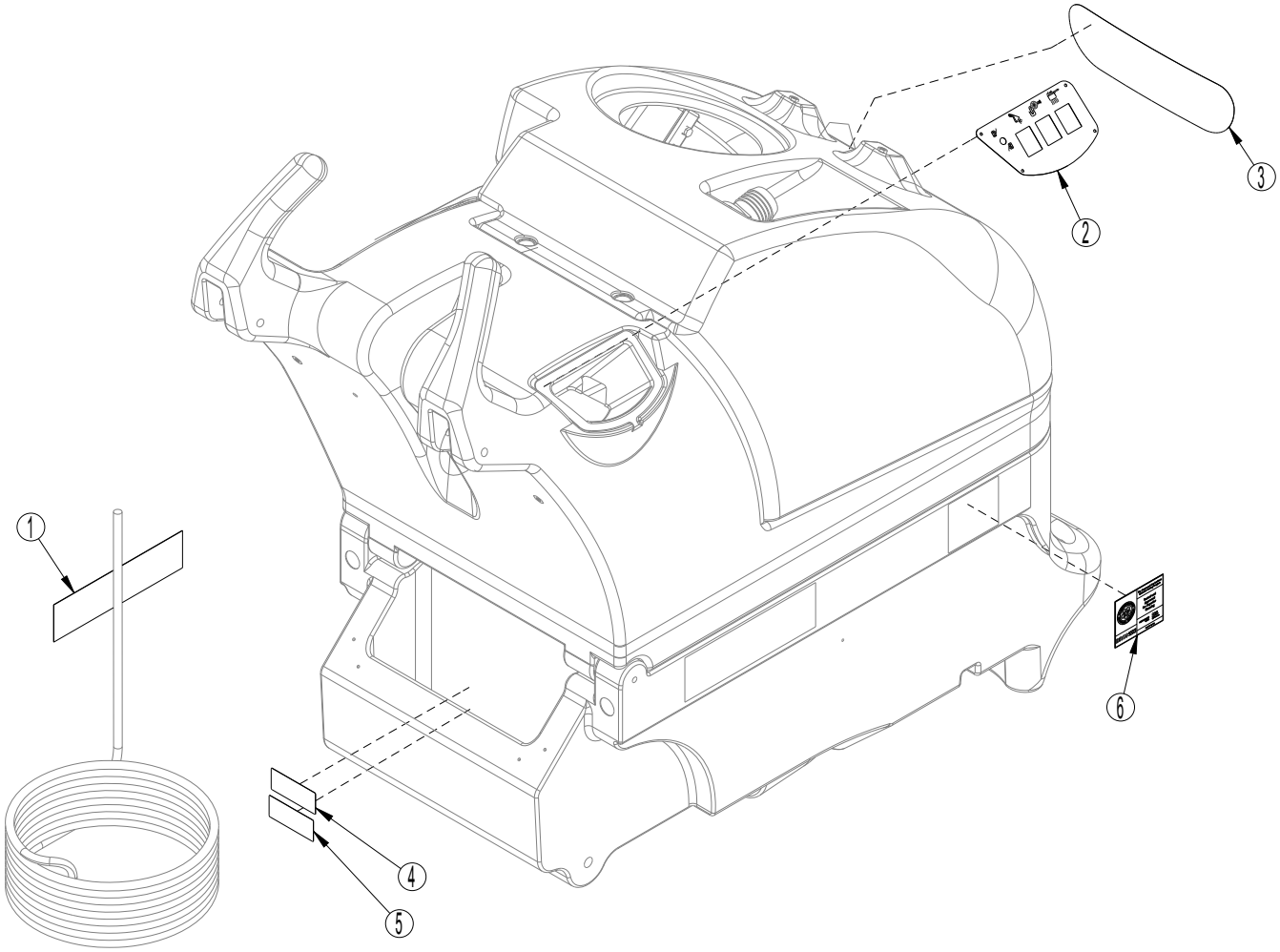

DECAL SYSTEM

Item	Ref. No.	Qty	Description
1	4339	1	Label Caution / Extension Cord **qty of 2 used on 100H (model 56105289)**
2	56105380	1	Switchplate Overlay-100 SC **only used on 100SC (model 56105290)**
	56105381	1	Switchplate Overlay-100 **only used on 100H (model 56105289)**
	56105441	1	Switchplate Overlay 100C **only used on 100C (model 56105288)**
3	56113166	1	Decal-EX20
4	56380692	1	Label Danger Electric Shock
5	1503A	1	Label Danger Electric Shock **NOTE 1**
6	2001A-CRI	2	Decal-CRI Bronze **NOTE 1**

NOTE 1 = Only used on 100H (models 56105289)

BASE SYSTEM HEATED

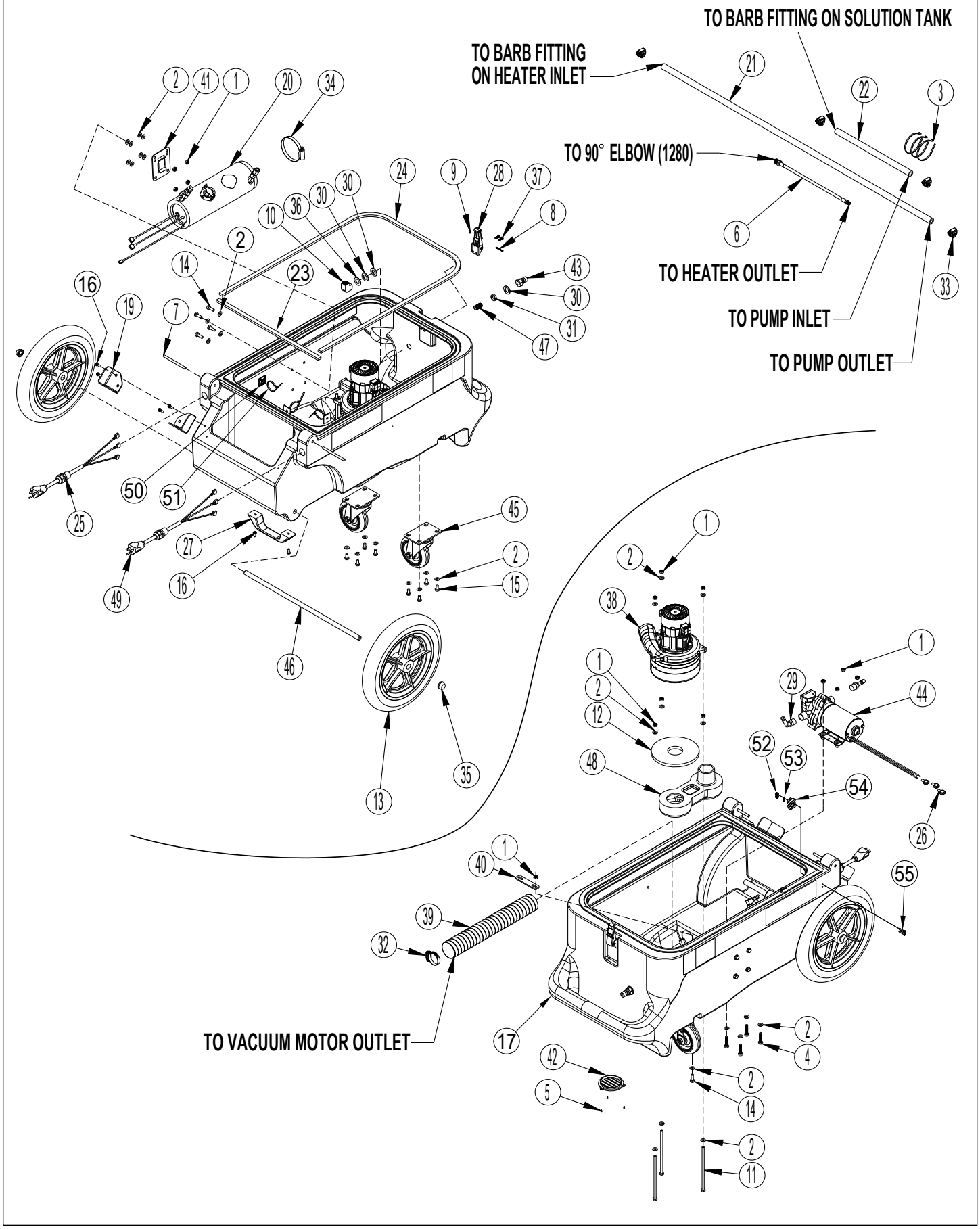

BASE SYSTEM HEATED

Kit	Item	Ref. No.	Qty	Description
K1	1		15	Nut-Nylock-Zp-1-4-20
K1	2		34	Washer Flat 3/16 Zinc Plat
	3	79	3	Tie, 8" Black
K1	4		4	Bolt-Hex-Ss-Zinc Plate-1/4-20x1-1/4
K1	5		3	Screw-Fhp-Ss-2x1/4-Sms
	6	313	1	Hose S/S Braided Teflon 1/4
	7	801	2	Hinge Pin Rod S/S 1/4 X
K1	8		1	Screw 2-56 X1 Panhead Philip
K1	9		1	Nut. Finish 2-56 Thread Zp
	10	1280	1	Elbow 90 Deg 1/4 Fpt X 1/4 F
K1	11		3	Bolt 1/4 X 20 6l Full Threa
	12	2013	1	Gasket 1 Side Adhesive 5-1/2 O
	13	2092	2	Wheel 12"X1" Black On Gray 1/2" Axle
K1	14		5	Scr- Hex SS 1/4-20 X .75
K1	15		8	Scr, Hex Hd Loc
	16	56009005	6	Scr, Pan Phil Ss Type AB 10-16 X .75
	17	56105341	1	Base-100 PSI SC **NOTE 1**
		56105243	1	Base-100 PSI **NOTE 2**
	[ ]	56105258	1	Harness-Main
	19	56105370	2	Wand Bracket
	20	56105371	1	Heater 1100w 120V **NOTE 1**
		56105372	1	Heater 1750w 120V **NOTE 2**
	21	56105398	1	Hose 3/8 Id Red
	22	56105399	1	Hose 3/8 Id Red
	23	56105407	1	Gasket-Poron 1/4x1/2x16.5
	24	56105408	1	Gasket-Poron 1/4x1/2x63.5
	25	56105262	1	Power Cord Pigtail-Yellow
K2	26		3	Term .250 Ins Tab
	27	56463650	1	Handle Grab

Kit	Item	Ref. No.	Qty	Description
	28	56471194	1	Latch Assembly
K2	29		2	Hose Barb Nylon 90 3/8 X 3/8
K1	30		3	Washer 1 Od X 9/16 Id X
	31	116A	1	Bushing 3/4 X 9/16
	32	156USP	1	Hose Clamp-Size 28-1-9/16- 2 1/2
	33	166USP	4	Hose Clamp-SS-3/8-7/8
	34	198USP	1	Hose Clamp 48 3-1/2dia 9
	35	27AUSP	2	Axel Cap Black Pal Nut
K1	36		1	Washer Brass Half Hard 1 X
K1	37		2	Bolt-Php-SS-8-32x1/2
	38	56105255	1	Vacuum Motor, 3-Stage, 5.7
		56113056	1	Vac Motor Brush Kit-120V **(for 56105255)**
	39	430A	1	Vac Hose 2" ID X 13.5 Black Rubber
	40	4404C	1	Tank Mate Bar
	41	455USP	1	Mount Heat Exchanger
	42	459USP	1	Louver 2-1/2 Gray Plastic
	43	45USP	1	Quick Disconnect Plug Male
K2	44		1	Pump 100 PSI
	45	905USP	2	Caster Swivel 4 Gray Non Ma
	46	910-1863	1	Axel Rod Zinc Plated 1/2 Ro
	47	92AUSP	1	Nipple Stainless Steel 1/4 Pip
	48	MA-6	1	Manifold For Cobra Black
	49	56105263	1	Power Cord Pigtail-Red **NOTE 2**
	50	1312	3	Mounting Pad
	51	35	3	Tie 4 Black Weather Resis
	52	16	4	Nut Nylon Lock 6/32 Z.P. **NOTE 4**
	53	56002431	4	Wsh Flt SAE 4 **NOTE 4**
	54	56183523	2	Terminal Block **NOTE 3**
	55	56002857	4	Scr Pan Phil 6-32 X .88 **NOTE 4**
	[ ]	SUBSYP1	1	Syphon-Hose-HHP-12
	[ ]	2154	2	Power Cord 12/3 SJTW 25 Y **NOTE 3**
				Service Kits
	K1	56105216	1	Kit-Hardware Base
	K2	56105217	1	Kit-Pump Complete 100PSI
	[ ]	FP256	1	Repair Kit Heat Bi-Metallic **NOTE 2**
	[ ]	FP256B	1	Repair Kit Heat Bi-Metallic **NOTE 1**

[ ] = Not Shown

NOTE 1: Only used on 100SC (model 56105290)
NOTE 2: Only used on 100H (model 56105289)
NOTE 3: Qty of 1 used on 100SC (model 56105290)
NOTE 4: Qty of 2 used on 100SC (model 56105290)

BASE SYSTEM COLD

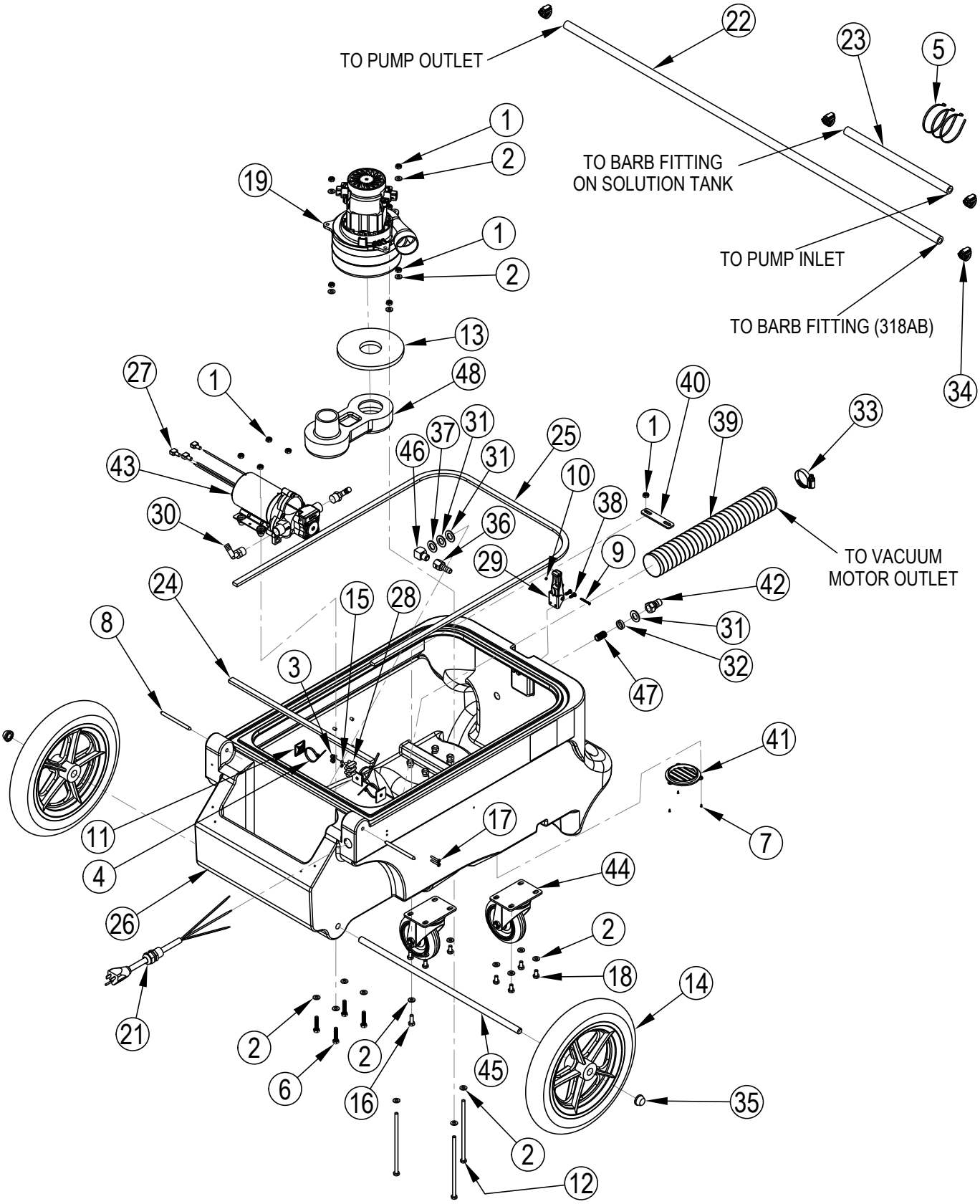

BASE SYSTEM COLD

Kit	Item	Ref. No.	Qty	Description
K1	1		11	Nut Nylock 1/4 -20 Zinc Pla
K1	2		22	Washer Flat 3/16 Zinc Plat
	3	16	2	Nut Nylon Lock 6/32 Z.P.
	4	35	3	Tie 4 Black Weather Resis
	5	79	3	Tie, 8” Black
K1	6		4	Bolt-Hex-SS-Zinc Plate-1/4-20 x 1-1/4
K1	7		3	Screw-Fhp-SS-2 x 1/4-Sms
	8	801	2	Hinge Pin Rod S/S 1/4 X
K1	9		1	Screw 2-56 X1 Panhead Philip
K1	10		1	Nut. Finish 2-56 Thread Zp
	11	1312	3	Mounting Pad
K1	12		3	Bolt 1/4 X 20 6l Full Threa
	13	2013	1	Gasket 1 Side Adhesive 5-1/2 O
	14	2092	2	Wheel 12”X1” Black On Gray 1/2” Axle
	15	56002431	2	Wsh, Flt SAE #4
K1	16		1	Scr- Hex SS 1/4-20 X .75
	17	56002857	2	Scr-Pan Phil 6-32 X .88
K1	18		8	Scr-Hex Hd Loc 1/4-20 x .50
	19	56105255	1	Vac Motor-13A-120V-3 Stage
	[ ]	56105258	1	Harness-Main
	21	56105262	1	Power Cord Pigtail-Yellow
	22	56105398	1	Hose 3/8 ID Red
	23	56105399	1	Hose 3/8 ID Red
	24	56105407	1	Gasket-Poron 1/4 x 1/2 x 16.5
	25	56105408	1	Gasket-Poron 1/4 x 1/2 x 63.5
	26	56105456	1	Base-Clarke-100C
K2	27		3	Term .250 Ins Tab

Kit	Item	Ref. No.	Qty	Description
	28	56183523	1	Terminal Block
	29	56471194	1	Latch Assembly
K2	30		2	Hose Barb Nylon 90 3/8 x 3/8
K1	31		3	Washer Fiber 1 x 9/16 x 1/16
	32	116A	1	Bushing 3/4 X 9/16
	33	156USP	1	Hose Clamp-Size 28-1-9/16- 2 1/2
	34	166USP	4	Hose Clamp 3/8-7/8
	35	27AUSP	2	Axel Cap Black Pal Nut
	36	318AB	1	Hose Barb Solution Tank Standard
K1	37		1	Washer Brass Half Hard 1 X
K1	38		2	Bolt 8-32 X 1/2 Pan Head
	39	430A	1	Vac Hose 2” ID X 13.5 Black Rubber
	40	4404C	1	Tank Mate Bar
	41	459USP	1	Louver 2-1/2 Gray Plastic
	42	45USP	1	Quick Disconnect Plug 1/4 NPT
K2	43		1	Pump 100 PSI
	44	905USP	2	Caster Swivel 4 Gray Non Ma
	45	910-1863	1	Axel Rod Zinc Plated 1/2 Ro
	46	91USP	1	Elbow 90 Deg Angle 1/4 Male
	47	92AUSP	1	Nipple Stainless Steel 1/4 Pip
	48	MA-6	1	Manifold For Cobra Black
	[ ]	SUBSYP1	1	Syphon-Hose-HHP-12
	[ ]	2154	2	Power Cord 12/3 SJTW 25 Y
				Service Kits
	K1	56105216	1	Kit-Hardware Base
	K2	56105217	1	Kit-Pump Complete 100PSI

[ ] = Not Shown

RECOVERY SYSTEM

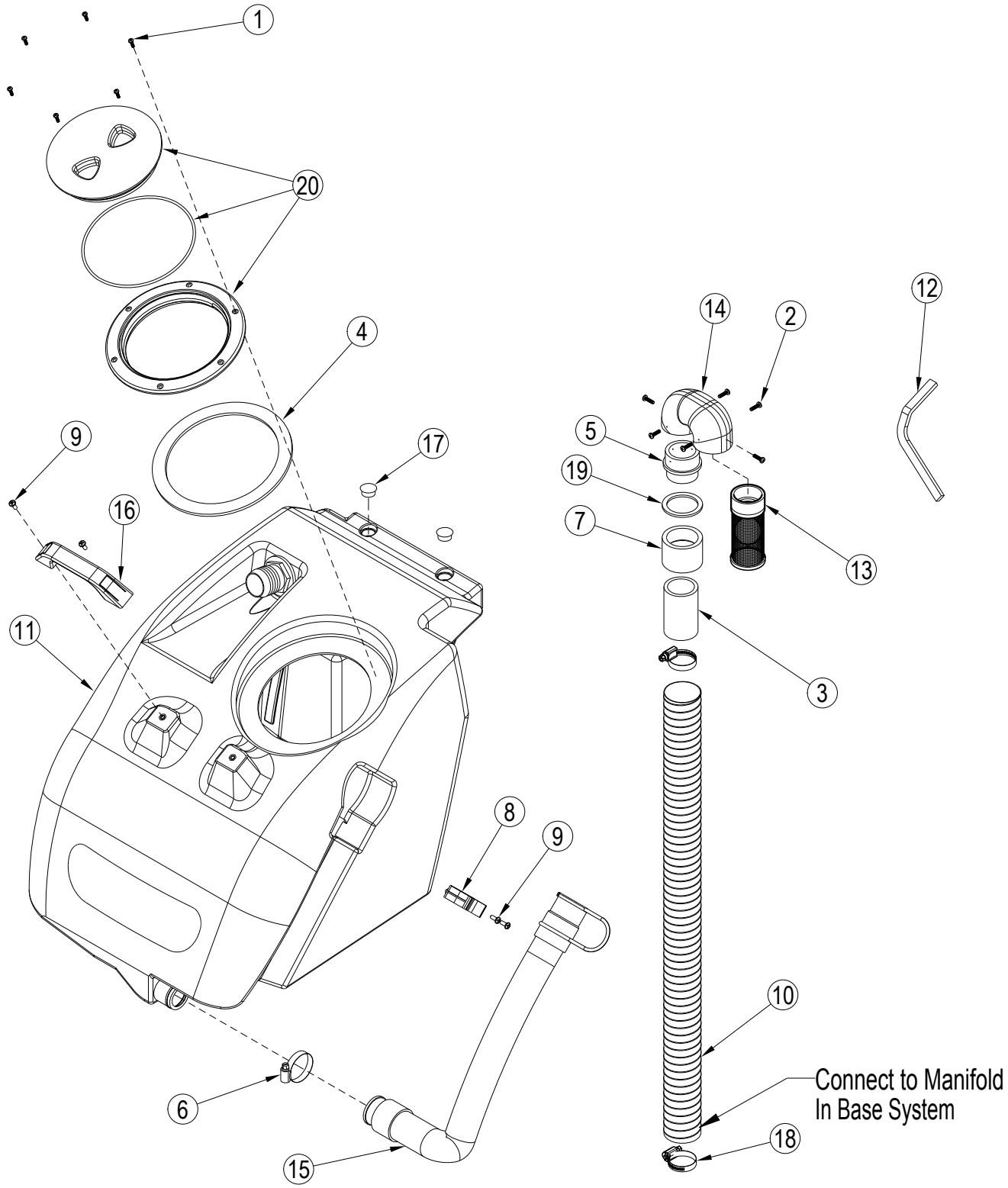

RECOVERY SYSTEM

Kit	Item	Ref. No.	Qty	Description
K1	1		6	Screw-Php-Ss-6x1/2-Sms
K2	2		6	Screw H-Low 8 x 3/8 PA
	3	935	3 IN	PVC Pipe 1-1/2 Sch 40 **(3 in.)**
K1	4		1	Gasket-Lid-Xlpe-6.5idx3/16 Thick
K2	5		1	Adapter Abs 1-1/2 Trap Sl
	6	1518	1	Hose Clamp 3/4 X 1 3/4 Ss
	7	1528	1	Adapter Female 1 1/2
	8	56392171	1	Clamp, Plastic
	9	56001993	4	Scr-Pan Phil 10-24 X .50
	10	56105241	1	Vac Hose-2.0 Id X 30.00 In
	11	56105448	1	Recovery Tank-Blue
	12	56105363	1	Gasket
K2	13		1	Filter S/S Ball Float
K2	14		1	Manifold-Ball Float
	15	56113125	1	Drain Hose
		56113126	1	Replacement Drain Hose Cap **(for use on 56113125)**
	16	56463650	1	Handle Grab
	17	56900041	2	Plug, Cap
	18	156USP	2	Hose Clamp-Size 28-1-9/16- 2 1/2
K2	19		1	Washer Flat 1-3/4 Id X 2-1
K1	20		1	Lid-Clear With Ring
		56383436	1	O-Ring for 56383435 Lid
				Service Kits
	K1	56105214	1	Lid Kit-Recovery Tank
	K2	56105237	1	Kit-Ball Float Assy

SOLUTION SYSTEM

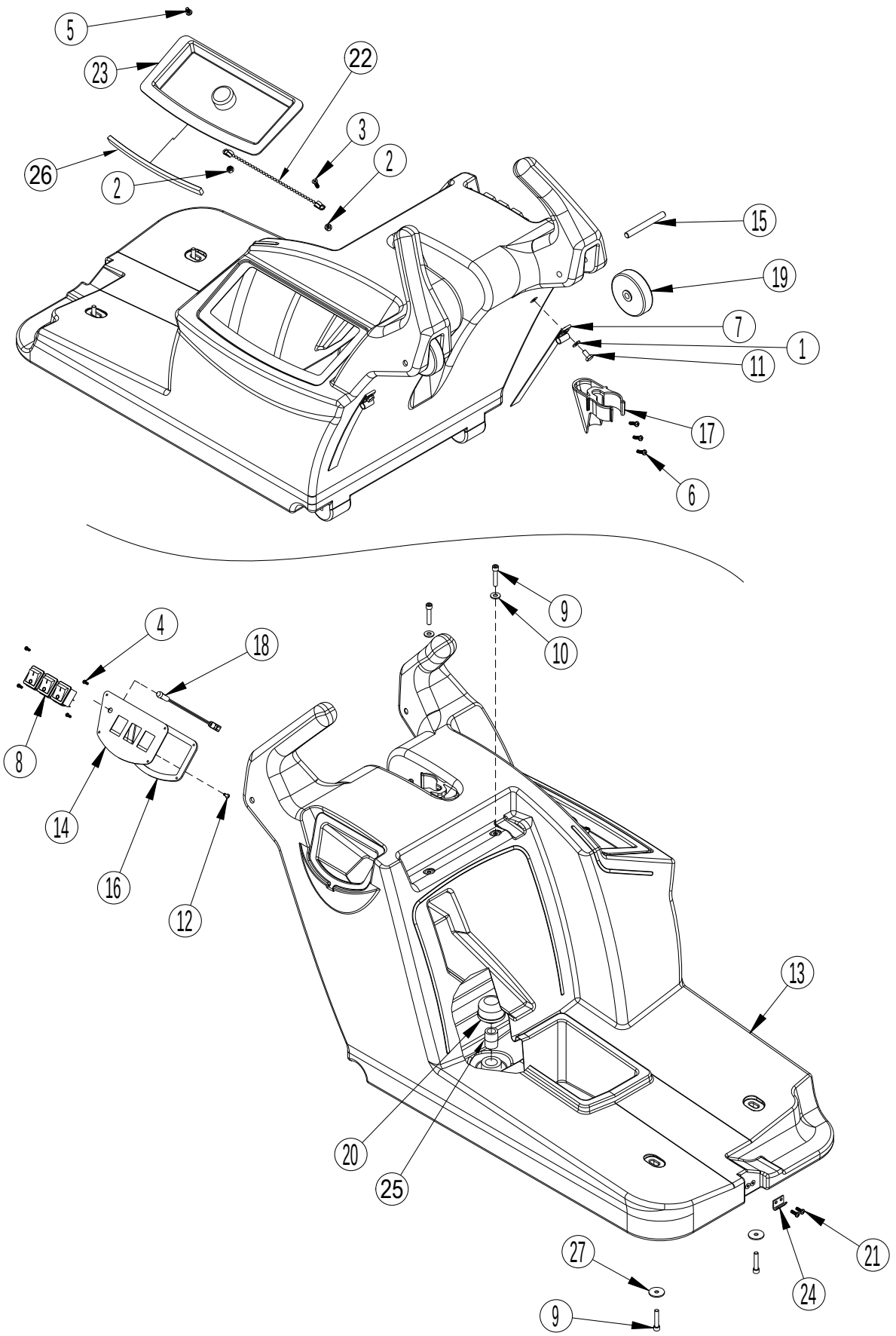

SOLUTION SYSTEM

	Item	Ref. No.	Qty	Description
K1	1		2	Washer Flat 3/16 Zinc Plat
K1	2		2	Nut-Nylon Lock-SS-10-32
K1	3		1	Fhp-10-32 5-8
K1	4		4	Screw-Php-SS-4x3/8-Sms
K1	5		1	Screw-Bhs-Brass-10-32 x 3/8-Ms
K1	6		3	Screw-Ph-Combo-Tapping-8 x 5/8 Ab
	7	1603	2	Strap/Buckle Cord Wrap W/Spur
	8	1644	3	Switch Rocker Dpst On/Off 20 **NOTE 1**
K1	9		4	Screw 1/4-20 X 1-1/4" Allen Head SS
K1	10		2	Wsh-Flt SAE SS 1/4
K1	11		2	Scr, Hex Hd Loc
K1	12		1	Scr-Pan Phil 6-32 X .31
	13	56105444	1	Solution Tank-Blue
	14	56105361	1	Switchplate **NOTE 3 100H**
		56105440	1	Switchplate **NOTE 4 100C**
		56105385	1	Switchplate **NOTE 5 100SC**
	15	56105362	2	Wheel Axle
	16	56105397	1	Gasket Switchplate
	17	56113020	1	Wand Clip
	18	56113091	1	Light Green 250v Assy **NOTE 3**
	19	56324499	2	Wheel 3.00
	20	207A	1	Filter 40 Mesh S/S 1/2NPT Fem
K1	21		2	Bolt-Php-SS-8-32x1/2
	22	805USP	1	Chain-Cover
	23	901A	1	Lid-Tank-Sol
	24	909A	1	Latch-Strike-SS-No 8 Hole
	25	92BUSP	1	Nipple PVC 1/2 N.P.T.
	26	56105363	1	Gasket
K1	27		2	Wsh,Flt SS .260 x 1.000 x .074
	[ ]	56105204	1	Jumper Wire WHT for 100SC **NOTE 2**
	[ ]	56105205	1	Jumper Wire BLK for 100SC **NOTE 2**
				Service Kit
	K1	56105225	1	Kit-Hardware Solution Tank

[ ] = Not Shown

NOTE 1: Quantity is 2 on 100C (model 56105288)
NOTE 2: Only used on 100SC and 100 C (models 56105290 & 56105288)
NOTE 3: Only used on 100H (model 56105289)
NOTE 4: Only used on 100C (model 56105288)
NOTE 5: Only used on 100SC (model 56105290)

LADDER DIAGRAM – SINGLE CORD HEATED

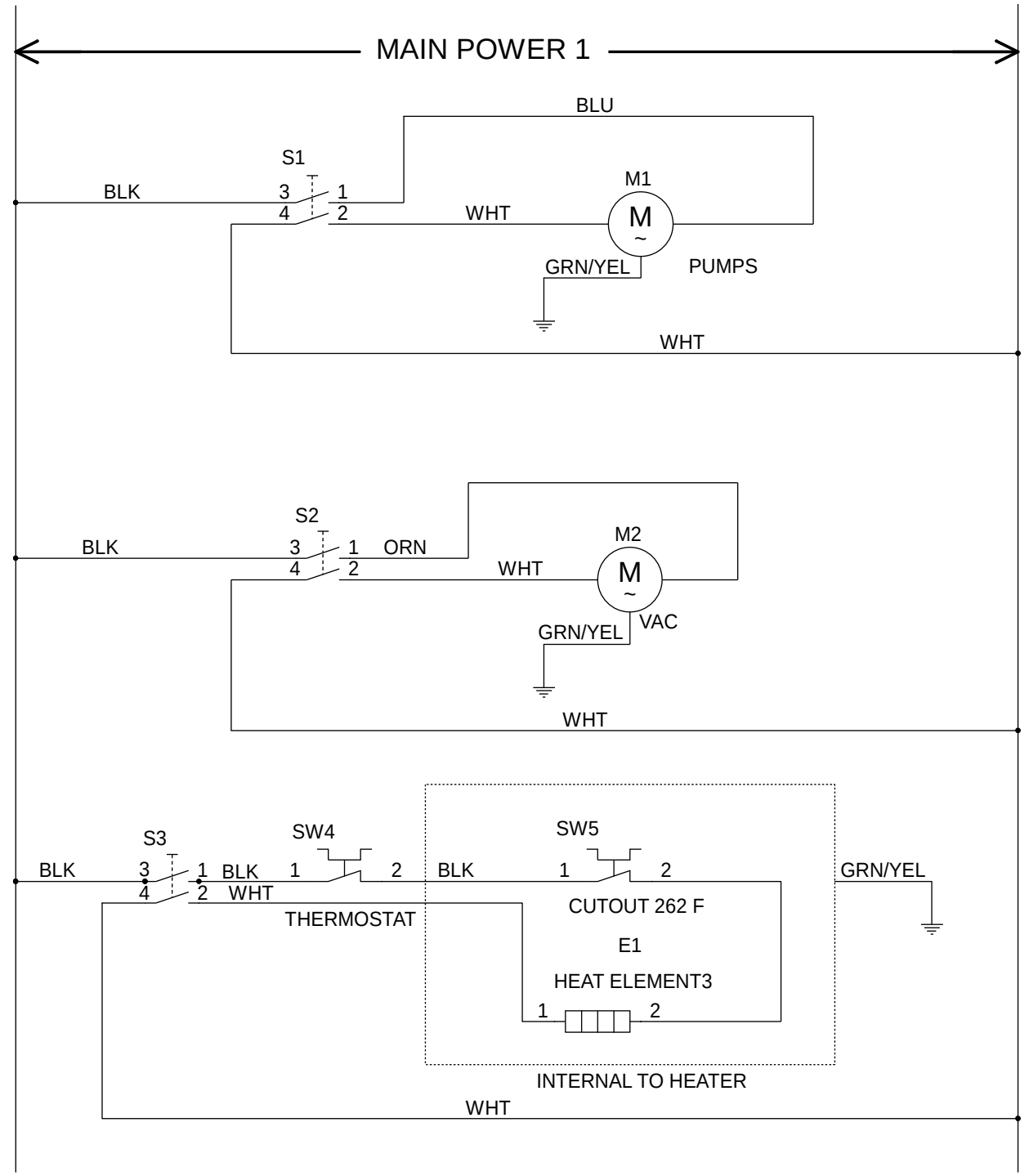

Kit	Item	Ref. No.	Qty	Description
	E1	56105371	1	Heater 1100w 120V
	M1	56105217	1	Kit-Pump Complete 100PSI
	M2	56105255	1	Vacuum Motor, 3-Stage, 5.7
		56113056	1	Vac Motor Brush Kit-120V **(for 56105255)**
	S1	1644	1	Switch Rocker Dpst On/Off 20A 125-250vac ul
	S2	1644	1	Switch Rocker Dpst On/Off 20A 125-250vac ul
	S3	1644	1	Switch Rocker Dpst On/Off 20A 125-250vac ul
K1	SW4		1	Thermostat **(part of E1)**
K1	SW5		1	Thermal Cut-Out 262 Deg **(part of E1)**

Service Kit

K1	FP256B	1	Repair Kit Heat Bi-Metallic

BLK = Black
BLU = Blue
GRN = Green
ORN = Orange
WHT = White
YEL = Yellow

LADDER DIAGRAM – DUAL CORD HEATED

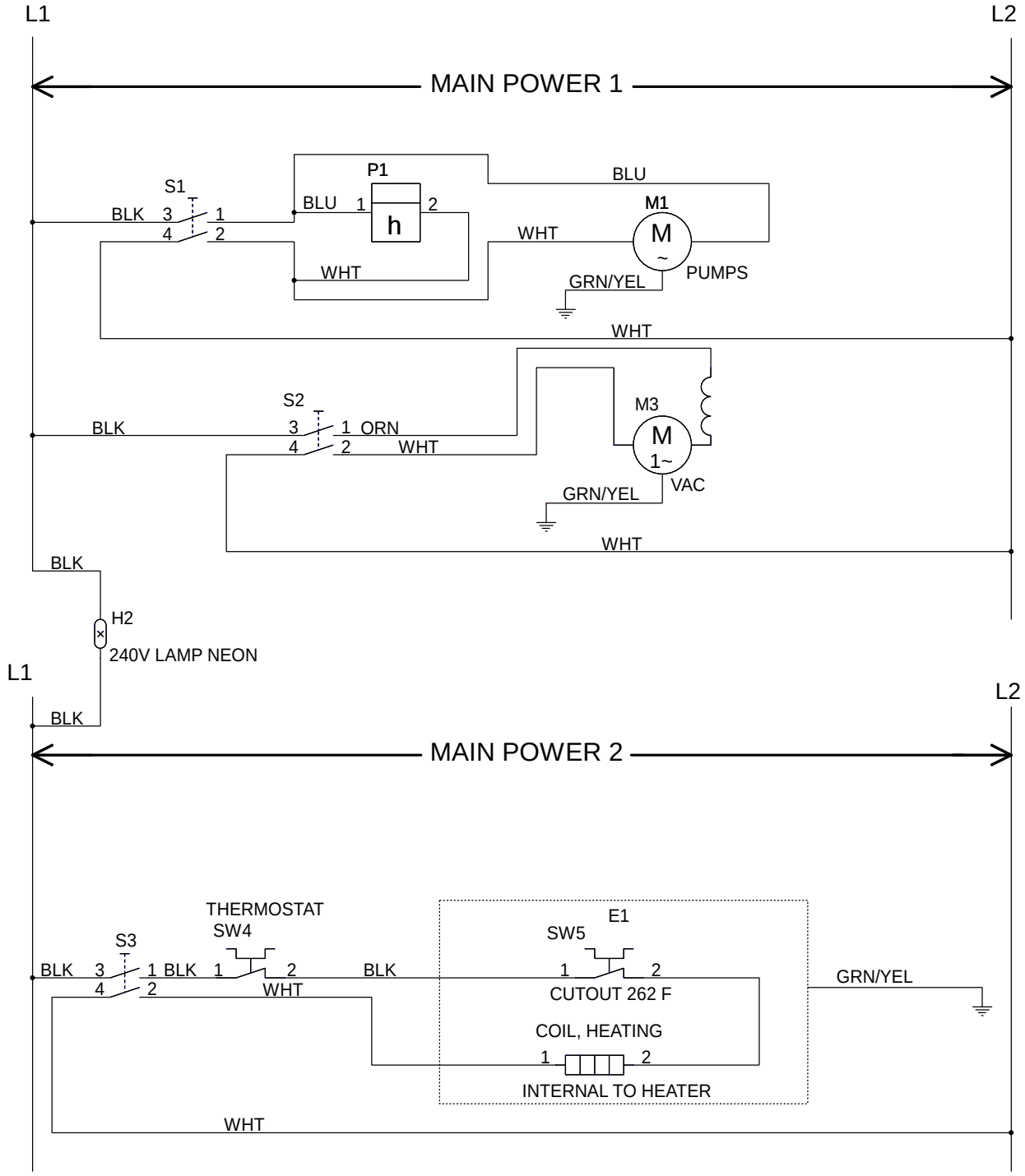

Kit	Item	Ref. No.	Qty	Description
	E1	56105372	1	Heater 1750w 120V
	H2	56113091	1	Light Green 250v Assy
	M1	56105217	1	Kit-Pump Complete 100PSI
	M3	56105255	1	Vacuum Motor, 3-Stage, 5.7
		56113056	1	Vac Motor Brush Kit-120V **(for 56105255)**
	P1	423-120-240	1	Hour Meter **(optional)**
	S1	1644	1	Switch Rocker Dpst On/Off 20A 125-250vac ul
	S2	1644	1	Switch Rocker Dpst On/Off 20A 125-250vac ul
	S3	1644	1	Switch Rocker Dpst On/Off 20A 125-250vac ul
K1	SW4		1	Thermostat **(part of E1)**
K1	SW5		1	Thermal Cut-Out 262 Deg **(part of E1)**

Service Kit

K1	FP256	1	Repair Kit Heat Bi-Metallic

BLK = Black
BLU = Blue
GRN = Green
ORN = Orange
WHT = White
YEL = Yellow

LADDER DIAGRAM – SINGLE CORD COLD

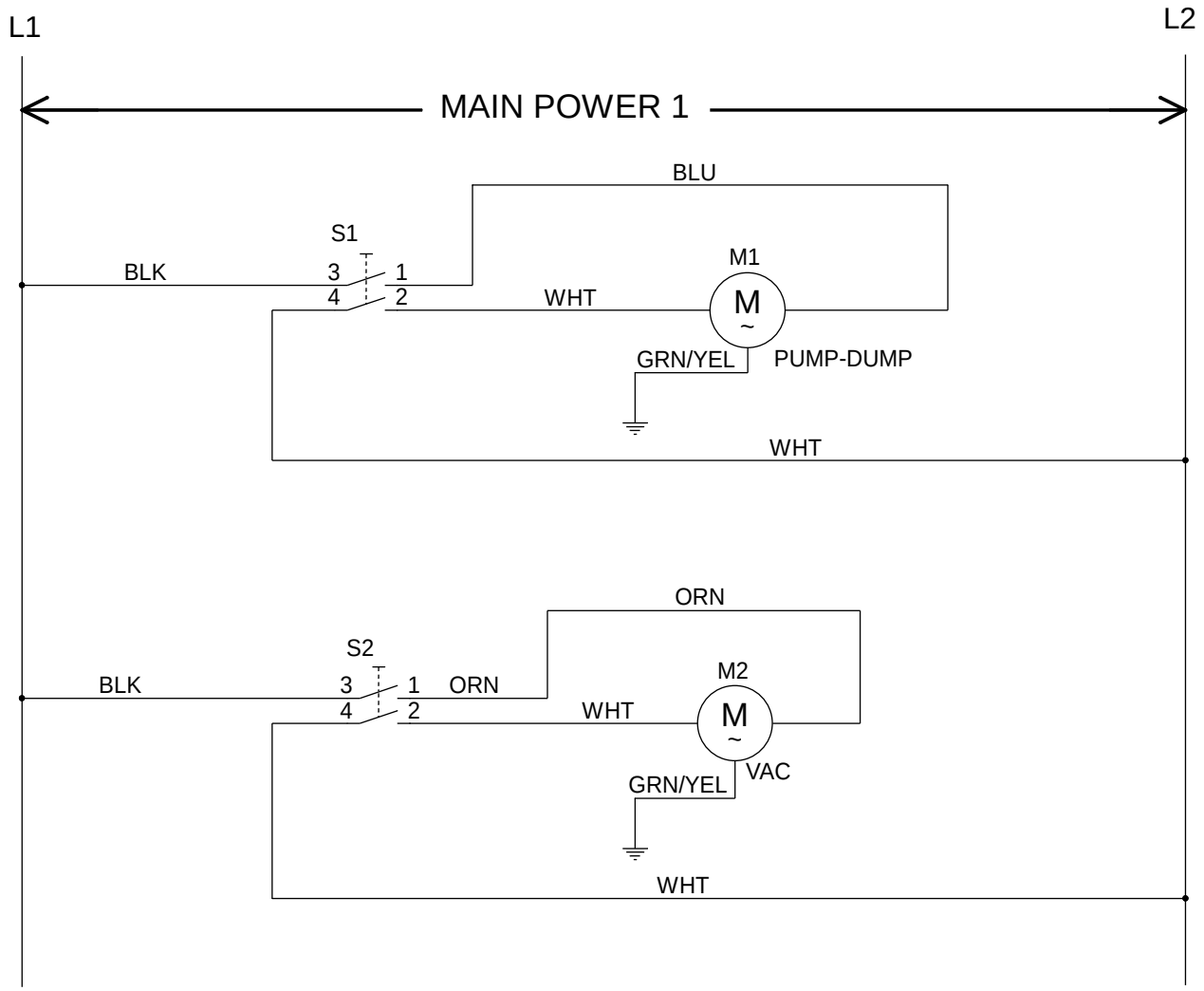

Kit	Item	Ref. No.	Qty	Description
	M1	56105217	1	Kit-Pump Complete 100PSI
	M3	56105255	1	Vacuum Motor, 3-Stage, 5.7
		56113056	1	Vac Motor Brush Kit-120V **(for 56105255)**
	S1	1644	1	Switch Rocker Dpst On/Off 20A 125-250vac ul
	S2	1644	1	Switch Rocker Dpst On/Off 20A 125-250vac ul

BLK = Black
BLU = Blue
GRN = Green
ORN = Orange
WHT = White
YEL = Yellow

OPTIONS & ACCESSORIES

Kit	Item	Ref. No.	Qty	Description
		56113108	1	Kit-Hour Meter 120/240 **(can only be used on 100H)**
		FPHT-5	1	Hand Tool Detailer S/S
		FP153	1	Vac Hose/Pressure LN 15 Extr
		56044706	1	Literature Pack
		FP195	1	Vac Hose/Pressure Line 25' 1/8
		FP196	1	Vac Hose/Pressure Line 25' Extension
		CSW-12	1	Carpet Scrub Wand 12 Head-Lp
		CSW-12HP	1	Carpet Scrub Wand 12 Head Doub
		56380572	1	Aquawand Carpet Scrub Wand 13

WATER FLOW DIAGRAM HEATED

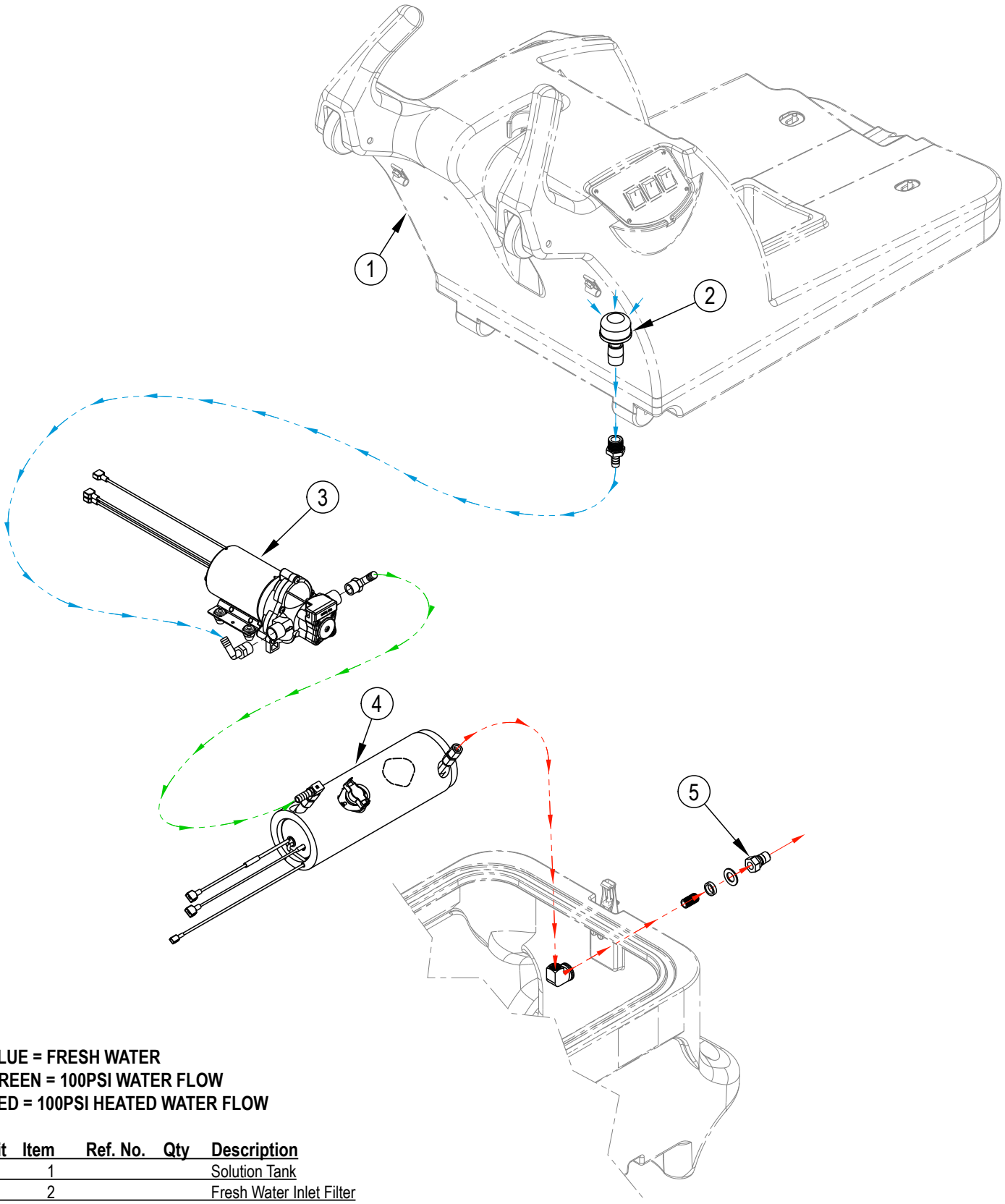

BLUE = FRESH WATER
GREEN = 100PSI WATER FLOW
RED = 100PSI HEATED WATER FLOW

Kit	Item	Ref. No.	Qty	Description
	1			Solution Tank
	2			Fresh Water Inlet Filter
	3			100PSI Pump
	4			Heat Exchanger
	5			100PSI Quick Connect

WATER FLOW DIAGRAM COLD

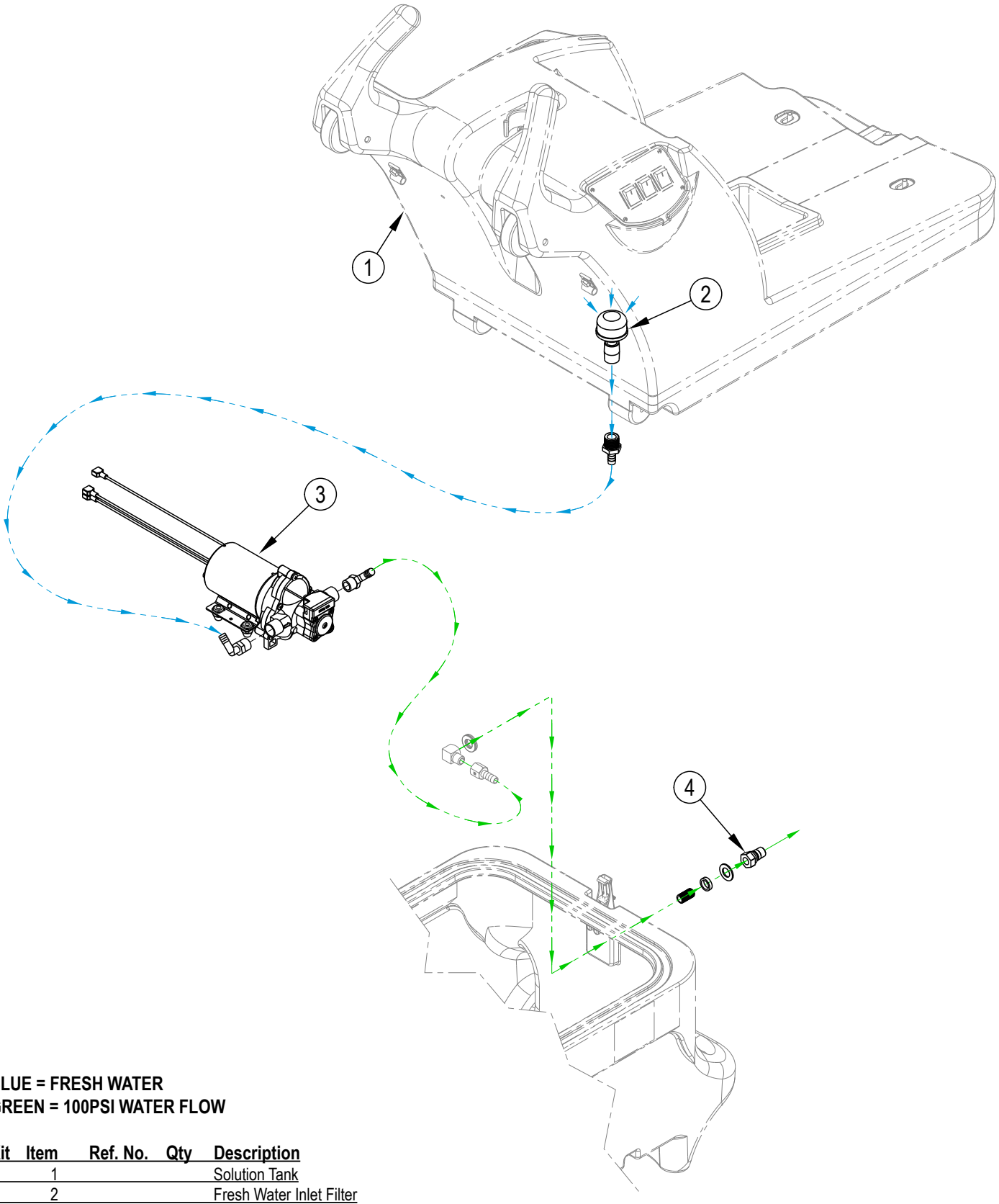

BLUE = FRESH WATER
GREEN = 100PSI WATER FLOW

Kit	Item	Ref. No.	Qty	Description
	1			Solution Tank
	2			Fresh Water Inlet Filter
	3			100PSI Pump
	4			100PSI Quick Connect

14600 21st Avenue North
Plymouth, MN 55447-3408
www.clarkeus.com
Phone: 800-253-0367
Fax: 800-825-2753
©2015 Nilfisk-Advance, Inc.